My name is _____

WHAT AM I?

Astronauts use me to get to their destination, what am I? Connect the dots starting with l to find out. When finished color me.

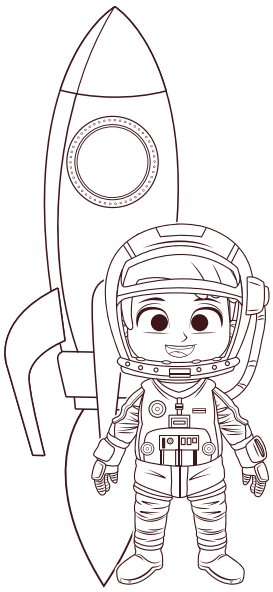

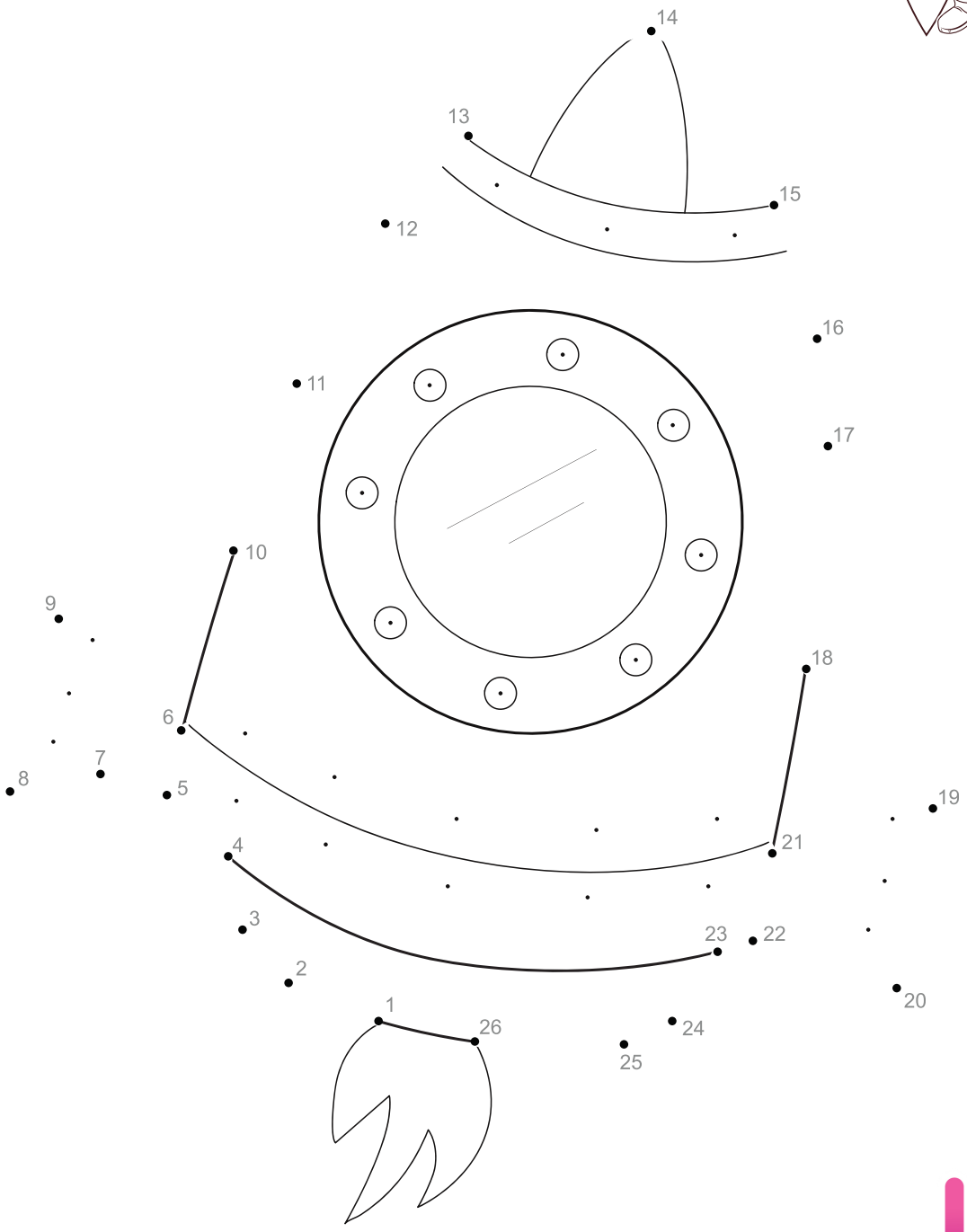

Learning with Luna
LearningWithLuna.com